Canon

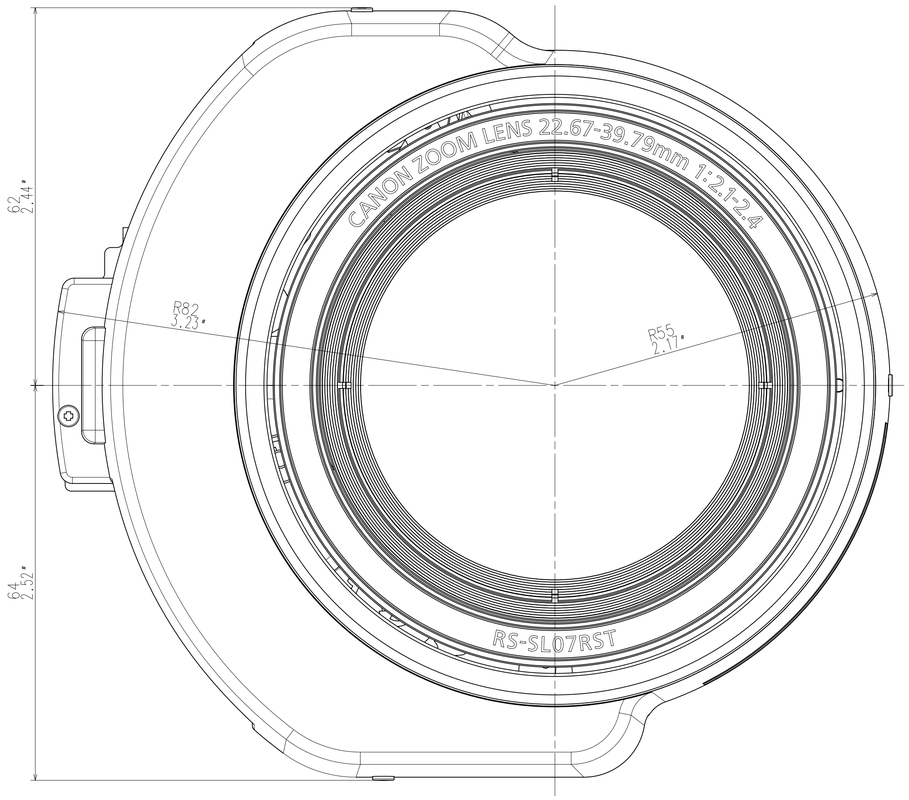
CANON ZOOM LENS 22.67-39.79mm 1:2.1-2.4
RS-SL07RST
R82
3.23"
R55
2.17"
62
2.44"
64
2.52"

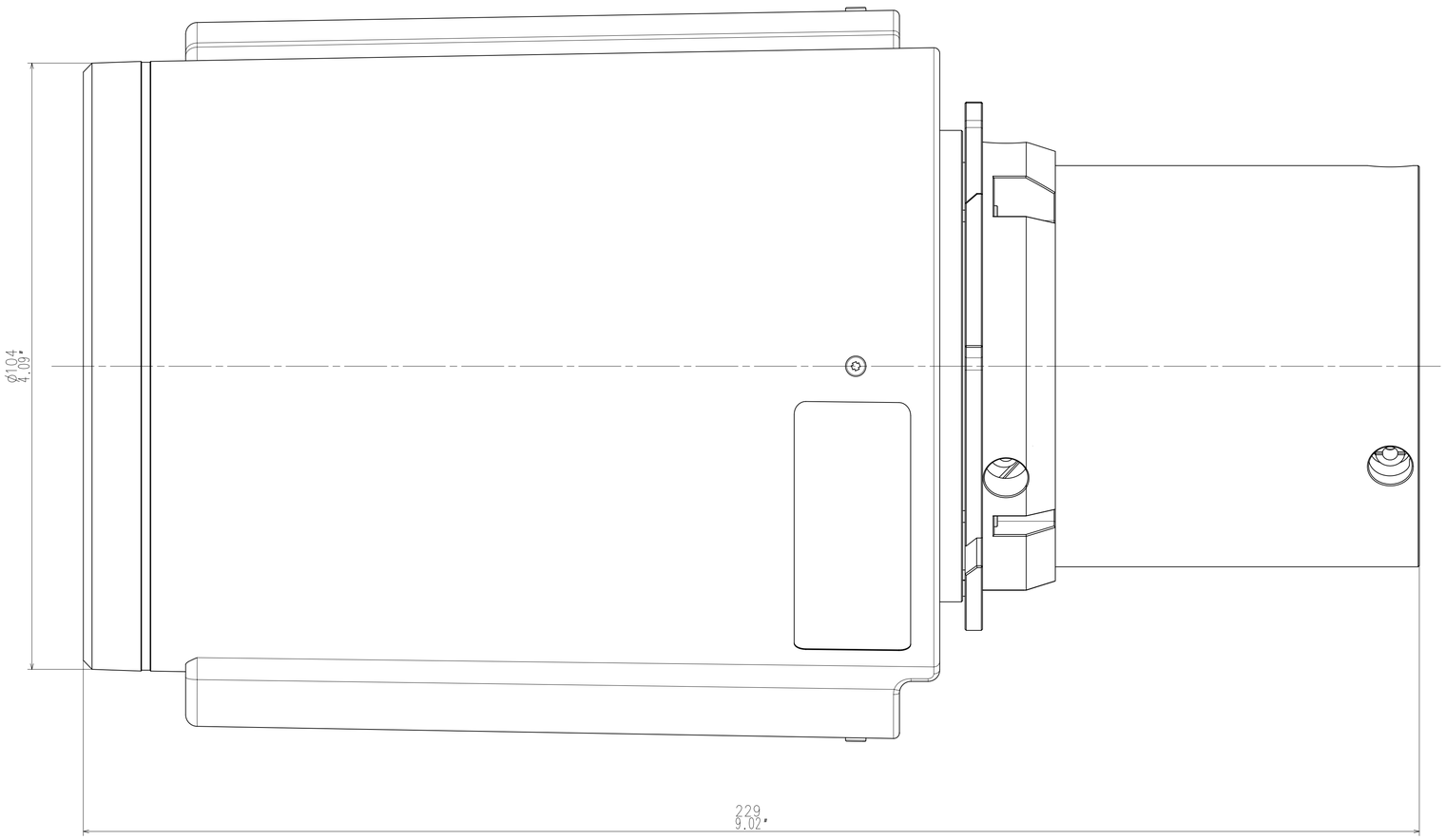
ø104
4.09"
229
9.02"