Canon

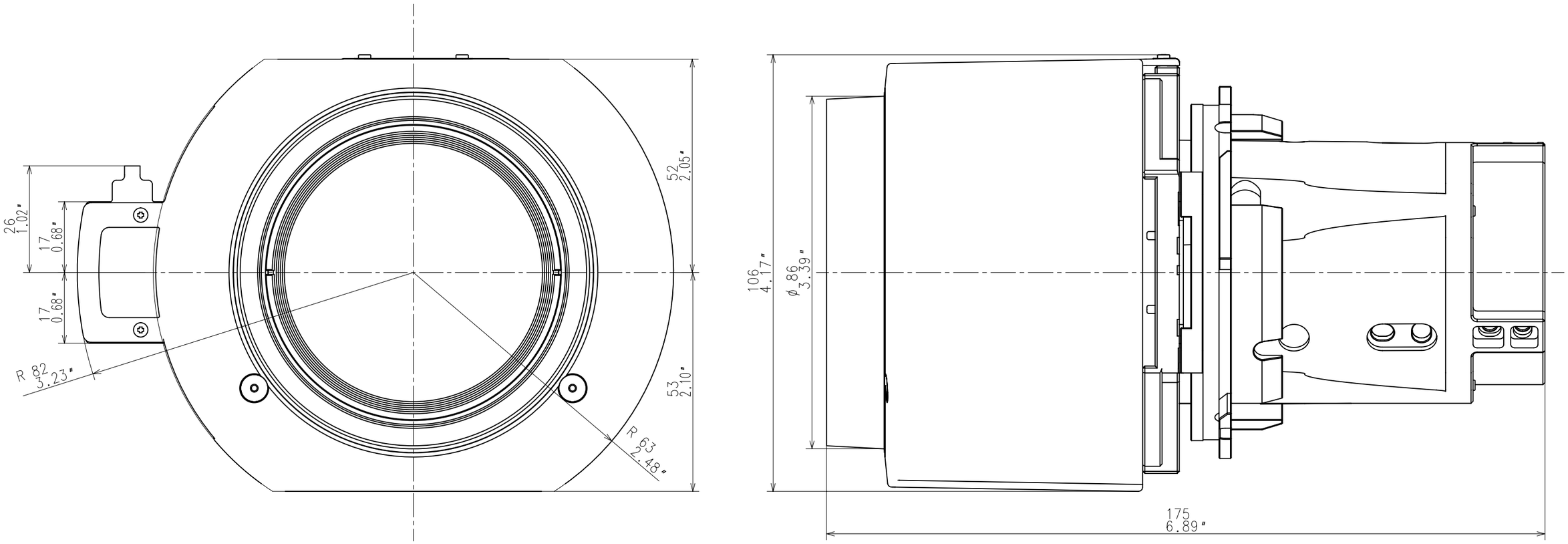
26
1.02"
17
0.68"
17
0.68"
R 82
3.23"
52
2.05"
53
2.10"
R 63
2.48"
106
4.17"
ϕ 86
3.39"
175
6.89"